P50r Series PANEL TRACKERBALL

Technical Drawings

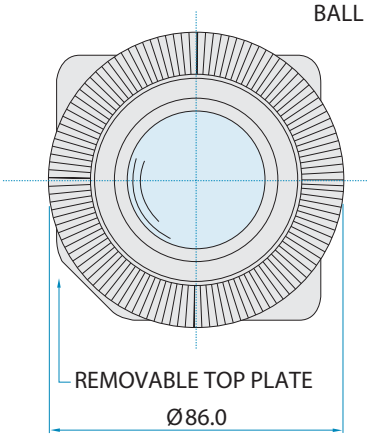

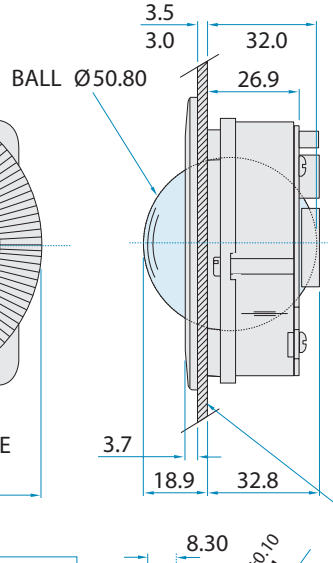

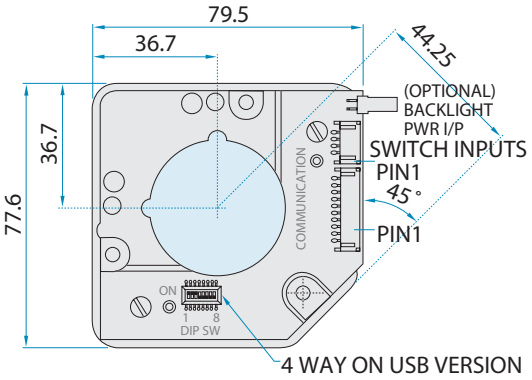

VIEW FROM UNDERSIDE OF TRACKERBALL
SHOWS CONNECTOR AND SWITCH LOCATION

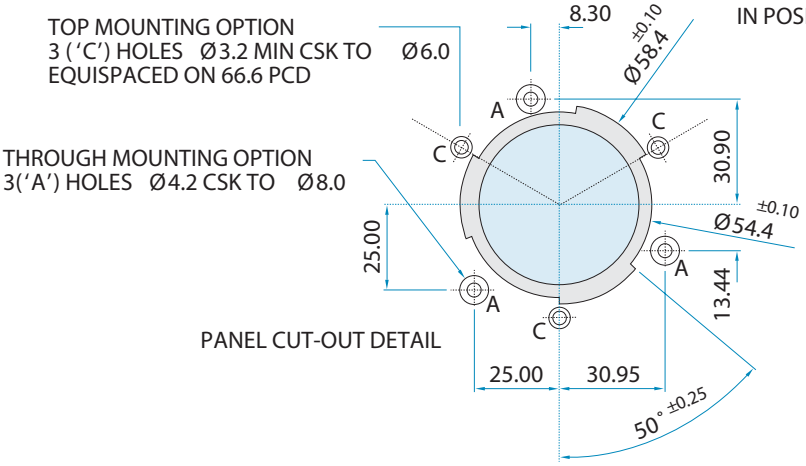

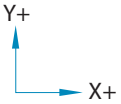

HEADER TYPES:

JST RIGHT ANGLE (2MM PITCH) PIN HEADER
MANUFACTURERS PART No. S10B-PH-SM3-TB
MATING PART No. PHR-10

JST RIGHT ANGLE (2MM PITCH) PIN HEADER
MANUFACTURERS PART No. S4B-PH-SM3-TB
MATING PART No. PHR-4

MOLEX HEADER 2-WAY RIGHT ANGLED LATCHING
MANUFACTURERS PART No. 22-05-7028

Cursor Controls Ltd, Conroi House, Brunel Drive, Newark, Nottinghamshire, U.K.
Tel: +44 (0) 1636 615600 Fax: +44 (0) 1636 615601 Website: www.cursorcontrols.com E-mail: sales@cursorcontrols.com